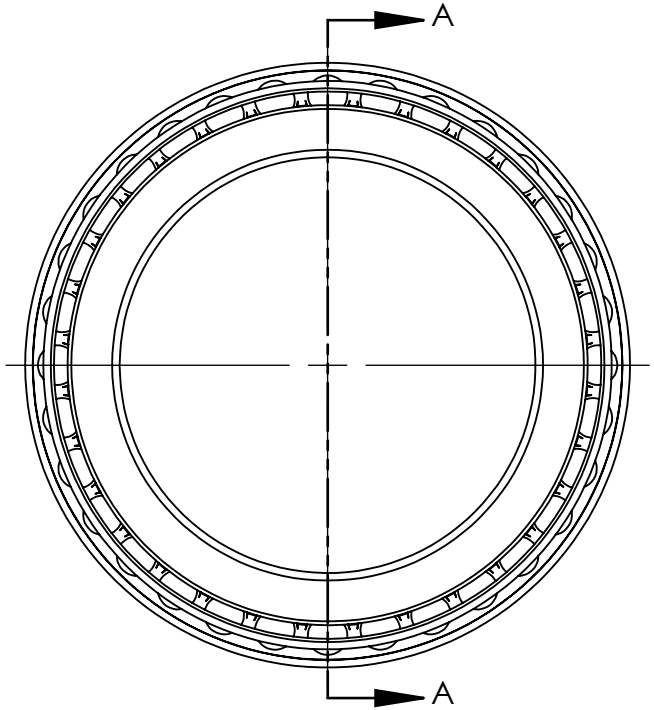

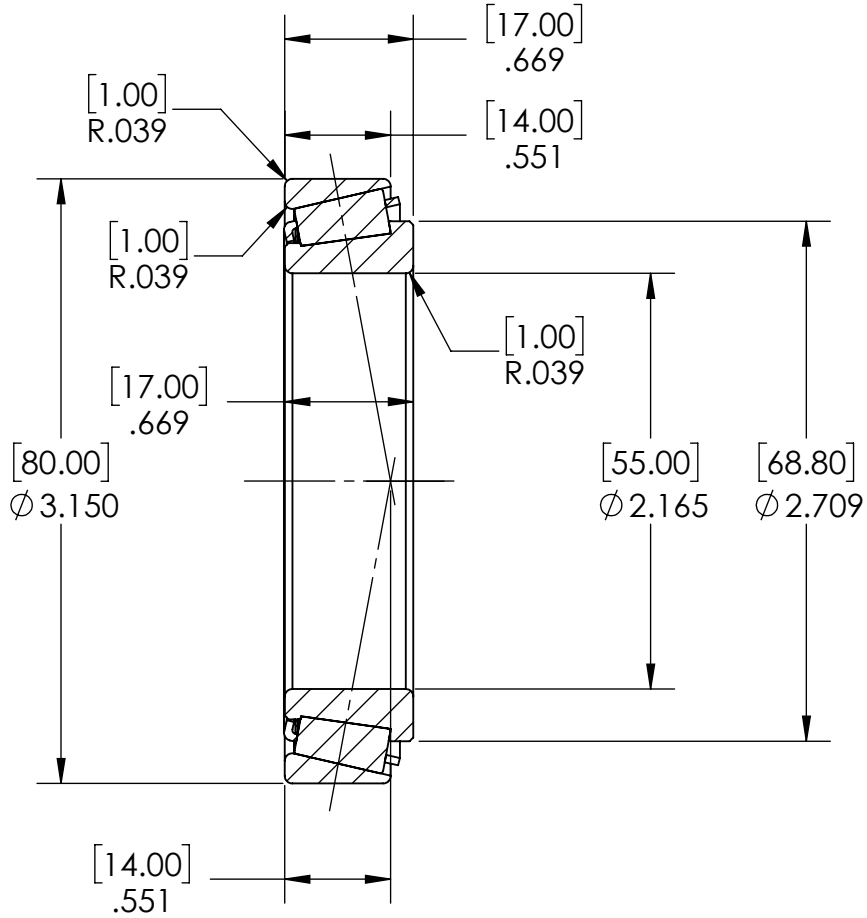

SECTION A-A

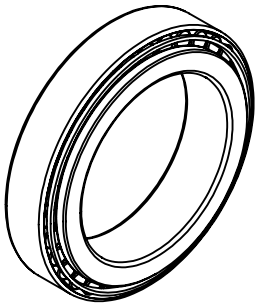

High Temp Bearings		
TITLE: 55mm TAPERED BEARING		
SIZE A	DWG. NO. 32911	REV A
SCALE: NTS	WEIGHT: 0.6LBS	SHEET 1 OF 1

5 4 3 2 1