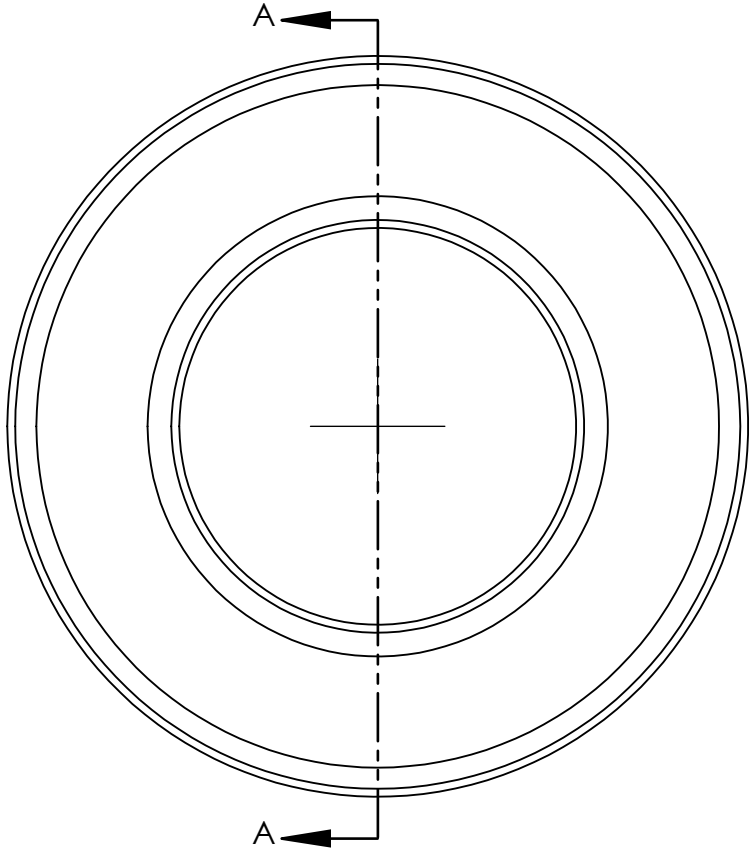

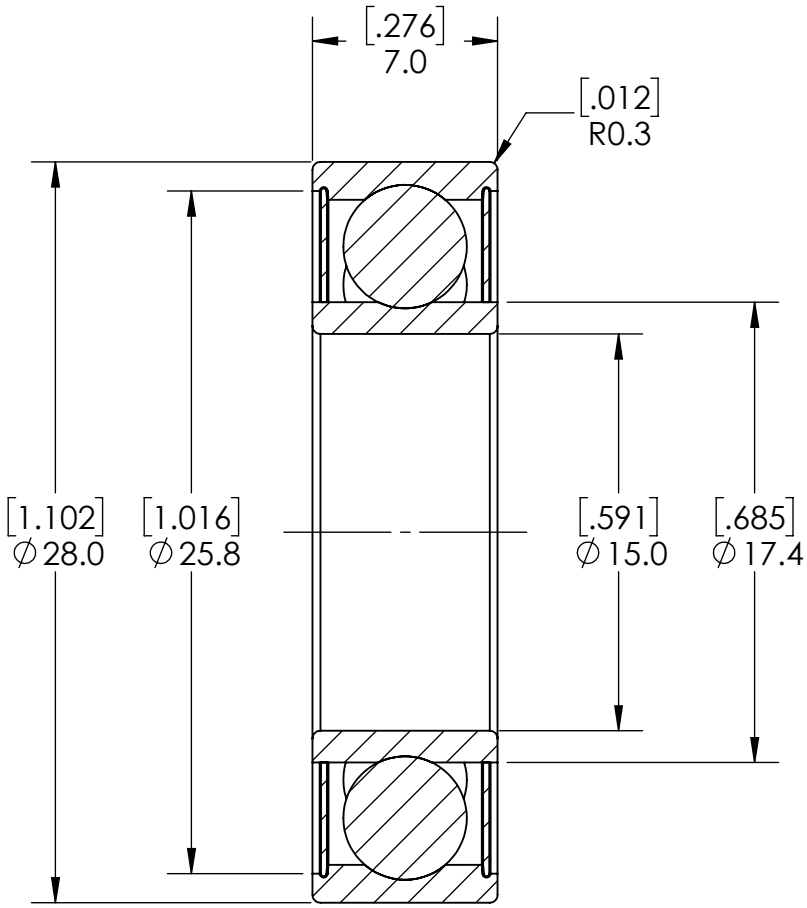

SECTION A-A

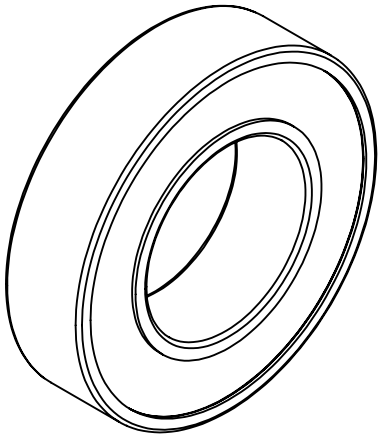

High Temp Bearings		
TITLE: Deep Groove Ball Bearing		
SIZE A	DWG. NO. 61902-2RS1	REV A
SCALE: NTS	WEIGHT:0.02Kg	SHEET 1 OF 1

5 4 3 2 1