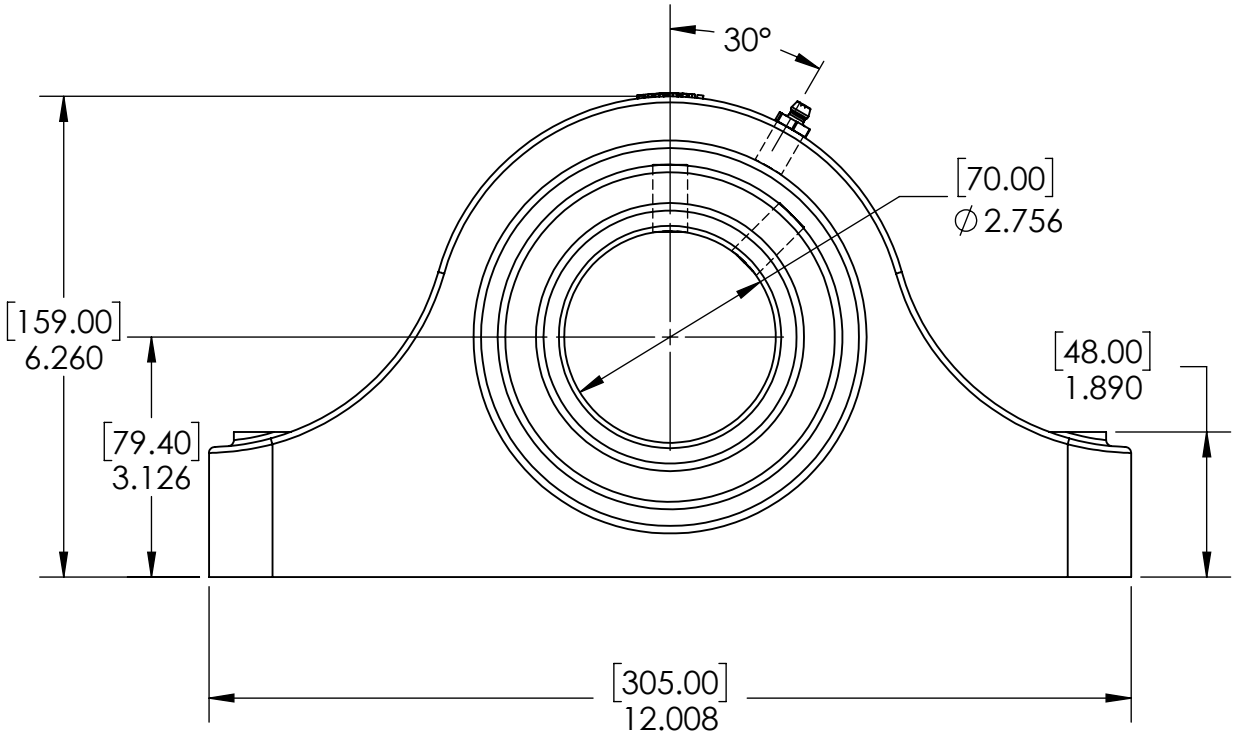

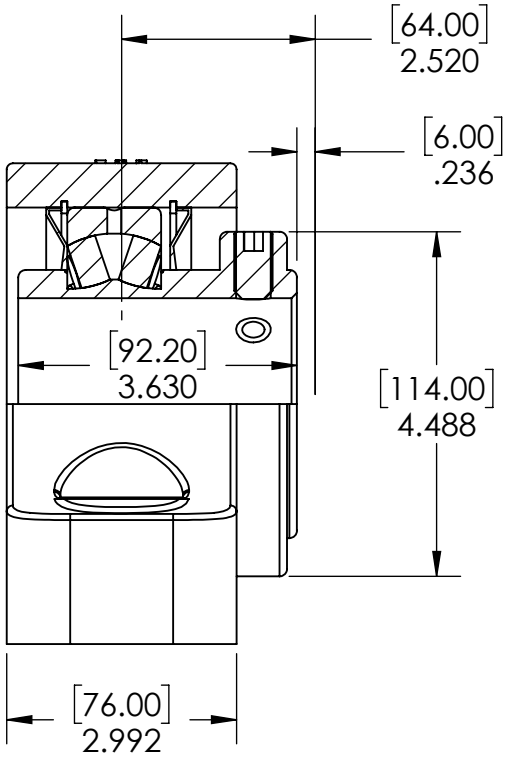

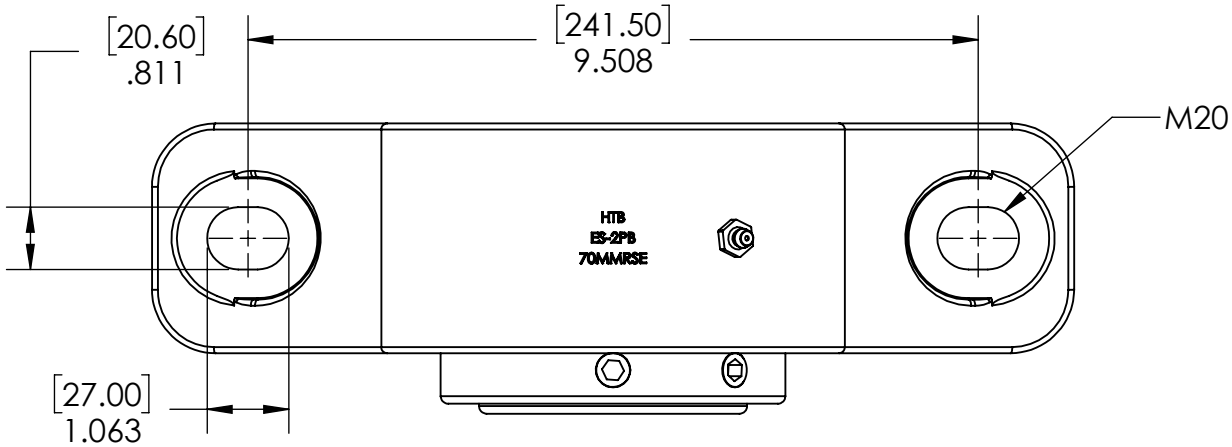

High Temp Bearings

TITLE:

70mm TYPE-E SPHERICAL EXPANSION 2-BOLT PILLOW BLOCK

SIZE	DWG. NO.	REV
A	ES-2PB-70MMRSE	A
SCALE: NTS	WEIGHT: 28LBS	SHEET 1 OF 1

5 4 3 2 1