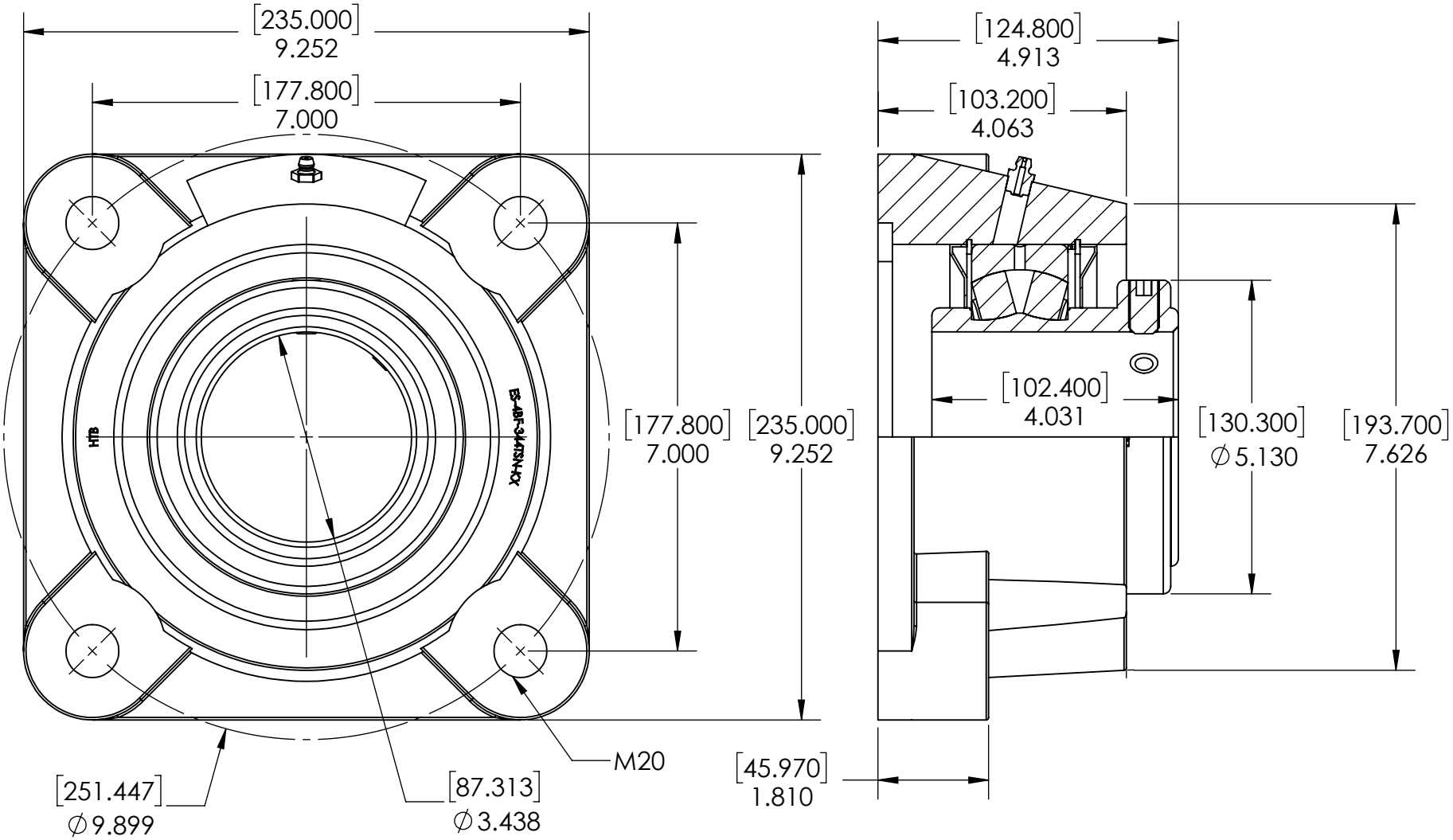

High Temp Bearings

TITLE:

3-7/16" HIGH TEMPERATURE TYPE E NON EXPANSION 4 BOLT FLANGE

SIZE	DWG. NO.	REV
A	ES-4BF-344TSN-KX	A

SCALE: NTS	WEIGHT: 32 LBS	SHEET 1 OF 1

5 4 3 2 1